hansgrohe

Talis N
HighArc Kitchen Faucet, A-Style 2-Spray Pull-Down, 1.75 GPM
Finishes : **brushed gold optic** Part no. : **72846251**

Description

Features

- Swivel range adjustable in 4 steps 60°, 110°, 150° or 360°
- Aerated spray, needle spray
- Toggle spray diverter
- MagFit magnetic sprayhead docking
- deck mounted
- Flow: 1.75 GPM (6.6 L/Min)
- Ceramic cartridge
- ⅜" connections
- Integrated double backflow prevention
- 1 ⅜" Mounting hole required
- Single lever kitchen mixer, connection hoses, Fastening set, Assembly instructions

Item details

List Price	$ 704.00

Technology

Quick Clean

Compliance

ADA

UPC C ®

Product image
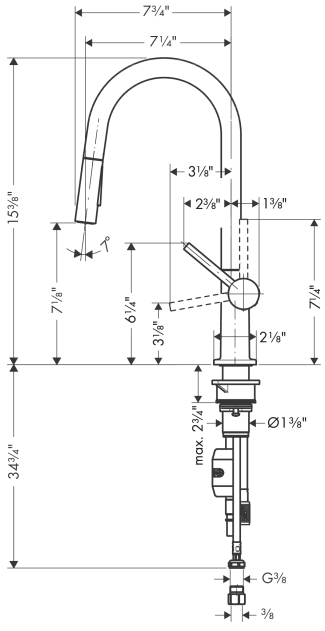
Scale drawing